sonnax®
TIME TESTED • INDUSTRY TRUSTED®

TRANSMISSION PARTS

Instructions

Ford E4OD, 4R100

1-2 & 2-3 Accumulator Control Valve Kit

Part No. 36948-13K

- Valve
- Retaining Clip
- Spring Shims (4)

Bore Sizing Tool

Part No. 36948-12

NOTE: This tool properly resizes the bore to prevent hang-up or sticking of the new valve.

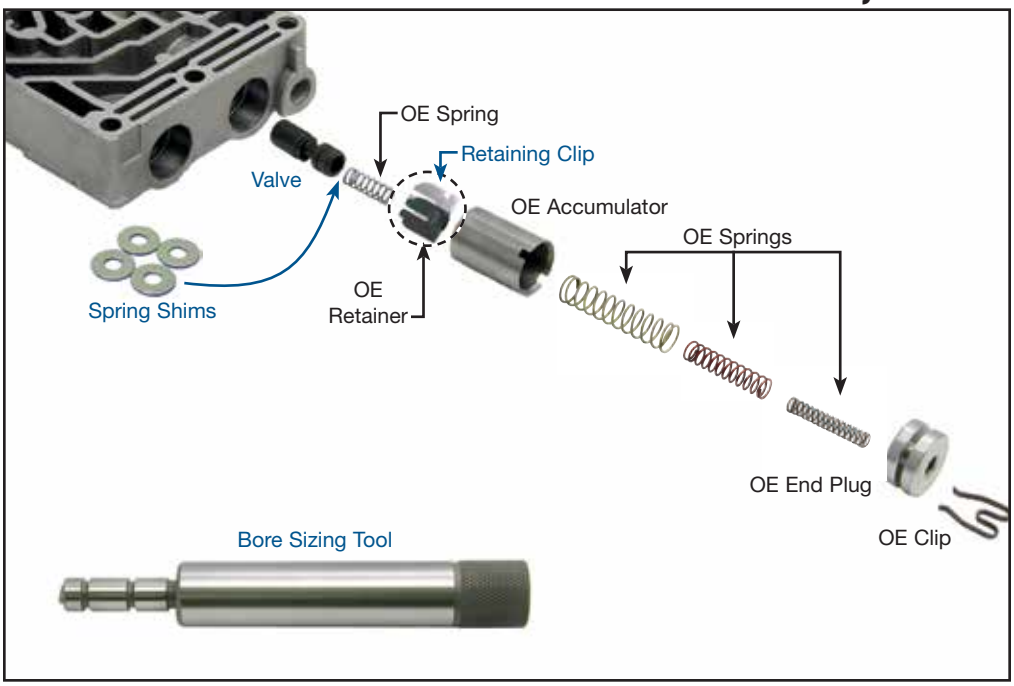

Figure 1

Recalibrating Shift Quality

See page 2 for details.

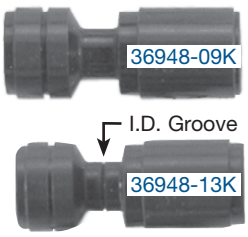

Sonnax Valve	1-2 Shift Quality	2-3 Shift Quality	3-4 Shift Quality
36948-09K	Very Firm Shift (NOT recommended)	Firmer Shift Than OE	Slightly Firmer Shift than OE (recommended)
36948-13K	OE Shift Quality (recommended)	OE Shift Quality (recommended)	OE Shift Quality

1. Disassembly

a. Remove all components from the accumulator control bore. The 3-4 spring (generally white) is different than the 1-2 and 2-3 spring. Keep springs separated for reinstallation.

b. Discard the OE accumulator valve and save all other parts for reuse.

NOTE: Use Sonnax bore sizing tool **36948-12** to smooth and properly size the accumulator control valve bore (**Figure 2**).

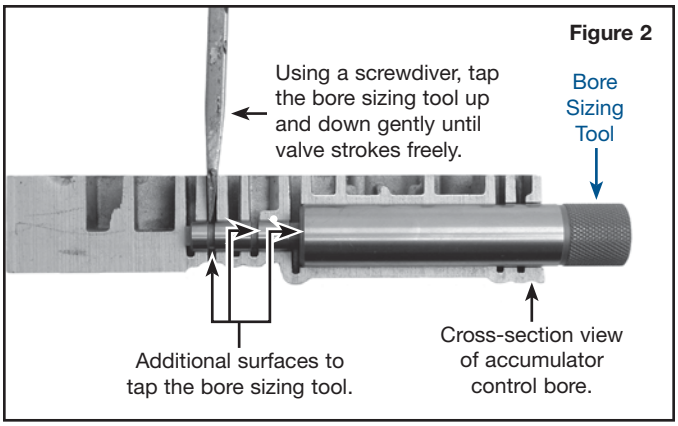

Figure 2

Bore Sizing Instructions

a. After removing OE components from the accumulator control bore, insert the end of the Sonnax bore sizing tool into the bore until it bottoms out.

b. Remove the bore sizing tool and check to see if the Sonnax valve moves freely within the bore.

c. If the valve does not move freely, reinstall the bore sizing tool and tap the sizing tool up and down using a hammer and screwdriver (**Figure 2**). Repeat process until the valve strokes freely.

©2014 Sonnax Industries, Inc.

2. Installation & Assembly

a. Install the recommended Sonnax valve (**Figure 1**).

NOTE: The accumulator valves should be assembled without shims and the vehicle road tested. For performance applications, the Sonnax shims can be added to the spring pocket in the accumulator valve to increase firmness of a specific shift. The more shims used, the firmer the shift.

b. Place the OE accumulator control valve spring into pocket on Sonnax valve and install both the OE and Sonnax retainer clips. Sonnax bore sizing tool **36948-12** can be used to compress this spring (**Figure 3**).

c. Reinstall remaining OE valve train.

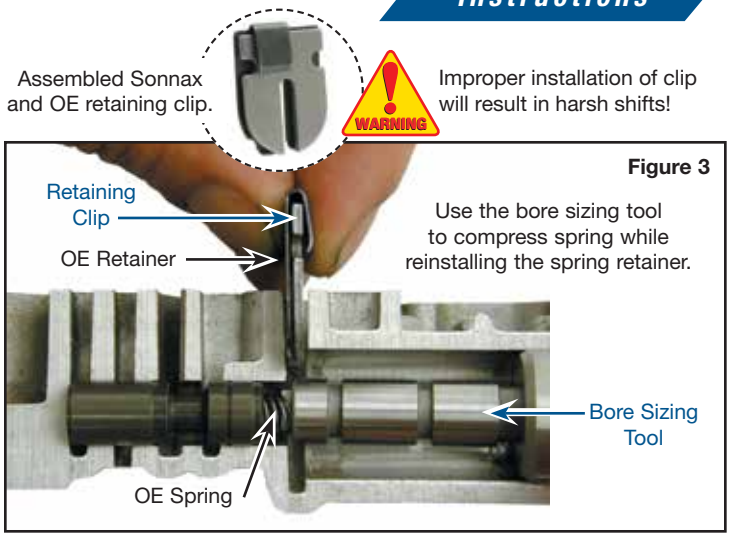

Figure 3

Recalibrating Shift Quality

Shift quality can be recalibrated to achieve a desired feel on a specific shift (i.e. 1-2) or change the overall shift feel of the unit in all shifts.

Targeted shift quality should be determined by the driver's preference, the vehicle application and what the vehicle is used for (what kind of load it will have).

For specific shift changes, using the **36948-09K** valve in any location will result in a firmer, quicker shift than the **36948-13K** valve in the same location. The use of the **36948-09K** increases oil flow, which also increases shift firmness (the **36948-09K** is recommended upgrade for all applications in the 3-4 location).

To INCREASE shift firmness:

For a specific shift, use one or more of the following techniques:

a. Install shims provided in the spring pocket of the valve. Generally, two are sufficient for heavy-duty use.

b. Install **36948-09K** control valve into 2-3 position.

c. Install Sonnax performance-rated accumulator springs **36948-18K**.

For all shifts in a particular unit:

a. Increase the diameter of the line modulator valve (**Figure 4**).

c. Install Sonnax performance-rated accumulator springs **36948-18K** in all three accumulator control bores.

To DECREASE shift firmness for all shifts in a particular unit:

Install a smaller diameter line modulator valve (**Figure 4**).

Shift quality at ALL shift points can be tailored by selecting the appropriate Sonnax line pressure modulator valve:

- **96948-01K** Firmest Shift
- **36948-05K** Moderate OE Shift
- **36948-03K** Softer OE Shift

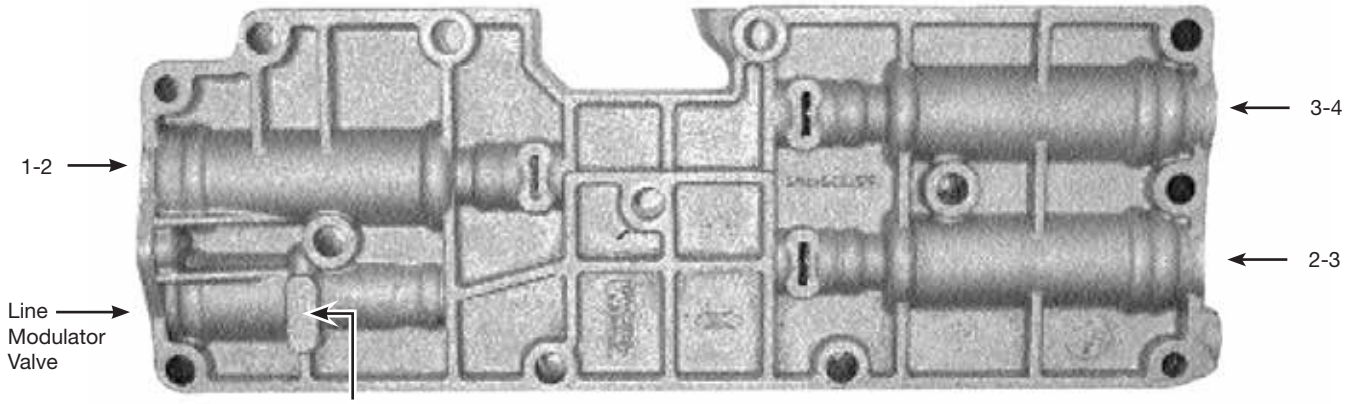

Figure 4

©2014 Sonnax Industries, Inc.