sonnax®
TIME TESTED • INDUSTRY TRUSTED®

TRANSMISSION PARTS

Instructions

Aisin AW TF-60SN, TF-80SC, TF-81SC; BMW 6F21WA; VW/Audi 09G, 09K, 09M

Oversized Clutch Cutoff Valve Kit

TOOL REQUIRED

Part No. 15741-63K

- Valve
- End Plug

***NOTE:** Fits three locations in each unit (**Figures 1, 2 & 3**).

Tool Kit

VALVE BODY FIXTURE REQUIRED

Part No. F-15741-TL63

- Reamer
- Reamer Jig
- Guide Pin

NOTE: Sonnax "F-Tool" kits designed to service a specific bore require the VB-FIX, a self-aligning valve body reaming fixture. More information and instructions can be found online at www.sonnax.com.

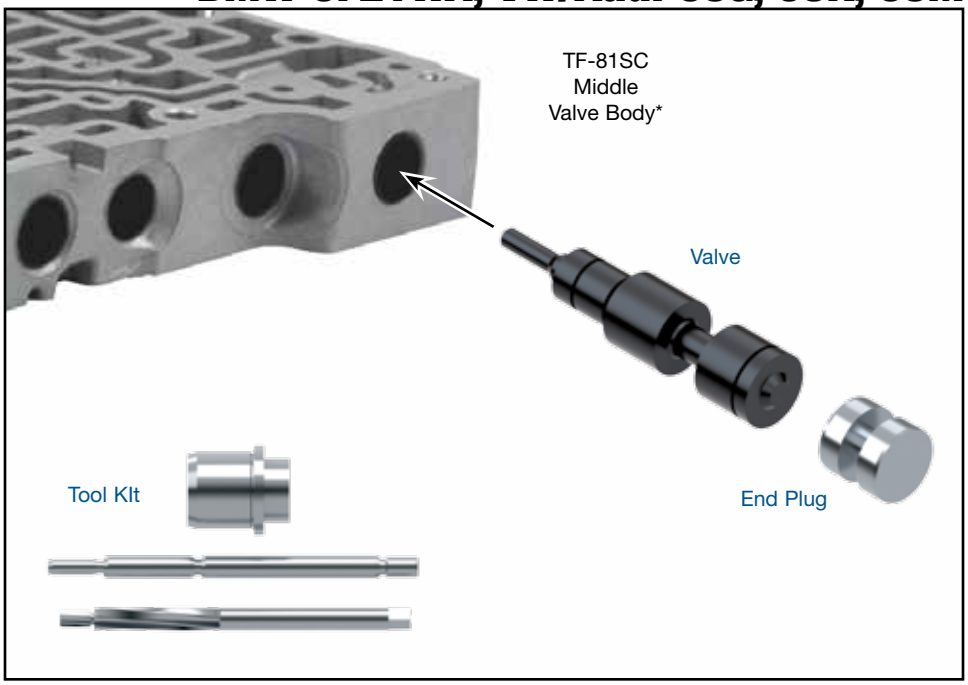

1. Disassembly

a. Remove OE retaining clip and save for reuse.

NOTE

NOTE: The TF-80SC Shift valve location is retained with a bolt-on plate rather than an end plug. Set aside fasteners and plate for reuse.

b. Remove and discard OE end plug and valve.

c. Remove OE spring and save for reuse.

2. Bore Reaming

Ream clutch cutoff bore (for reaming instructions/reamer care, please visit www.sonnax.com). Sonnax reaming tool kit **F-15741-TL63** and **VB-FIX** are required for this operation.

3. Installation & Assembly

a. Ensure all debris has been removed from valve bore and body.

b. Reinstall OE spring.

c. Install Sonnax valve, ensuring spring seats over valve spring guide.

d. Install Sonnax end plug and secure with OE retaining clip.

e. For TF-80SC Shift valve, reinstall and secure OE end plate.

4. Final Testing

Vacuum testing at the port(s) indicated holds the recommended minimum 16 and 18 in-Hg (**Figure 4**).

©2016 Sonnax Industries, Inc.

Figure 1

TF-60SN Middle Valve Body: Side 1

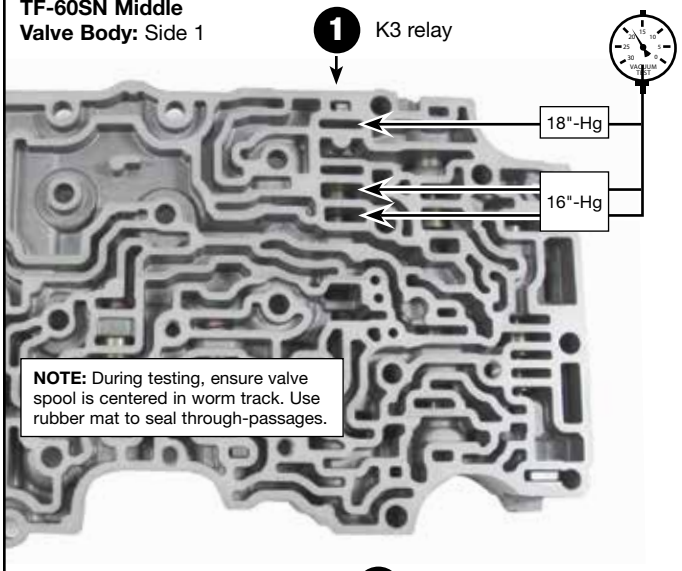

TF-60SN Middle Valve Body: Side 2

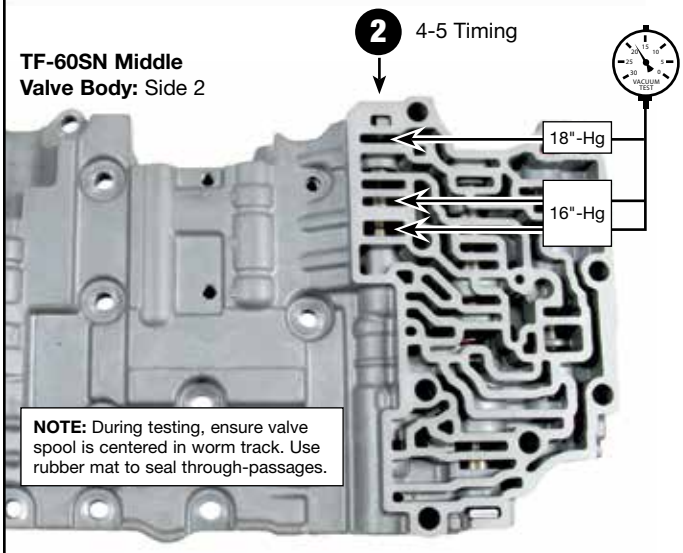

TF-60SN Lower Valve Body

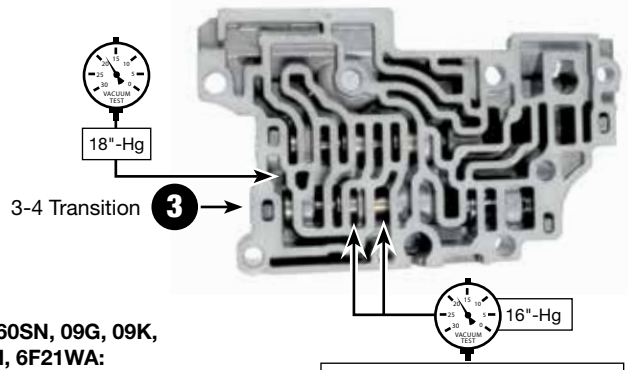

TF-60SN, 09G, 09K, 09M, 6F21WA:
Fits 3-4 transition bore, K3 relay bore & 4-5 timing bore.

Figure 2

TF-80SC Middle Valve Body: Side 1

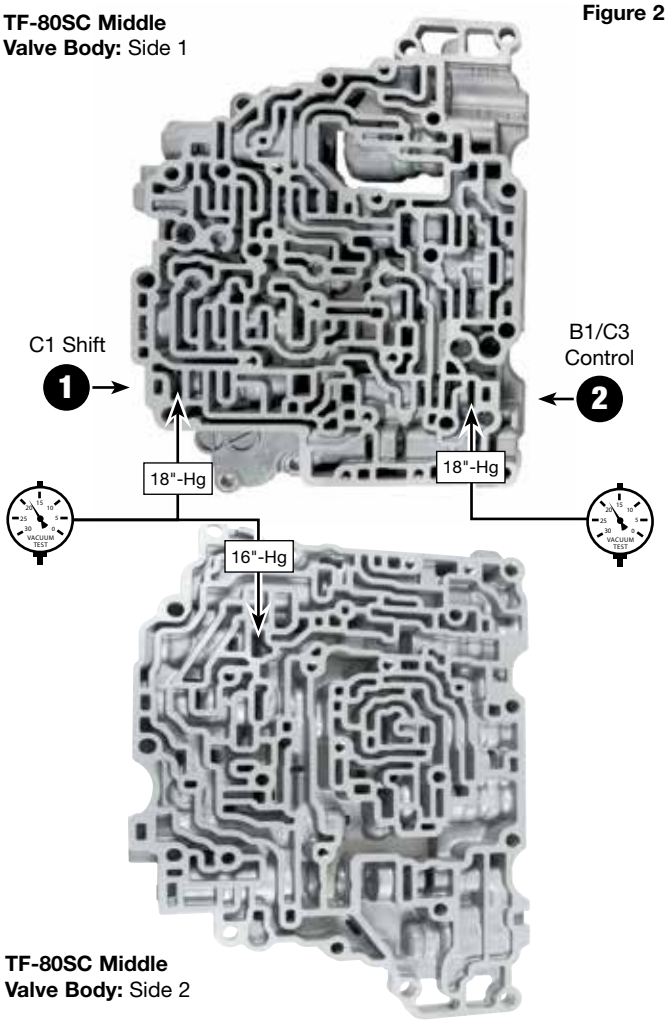

TF-80SC Middle Valve Body: Side 2

TF-80SC Main Accumulator Valve Body

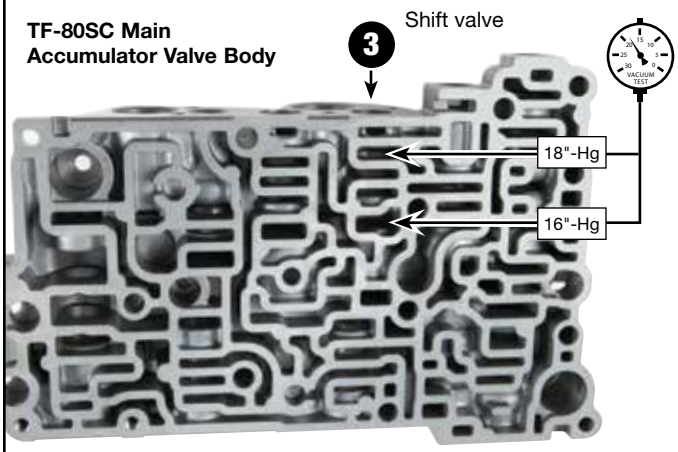

TF-80SN: Fits C1 shift bore, B1/C3 control bore & Shift valve bore.

©2016 Sonnax Industries, Inc.

TF-81SC Middle Valve Body: Side 1 **Figure 3**

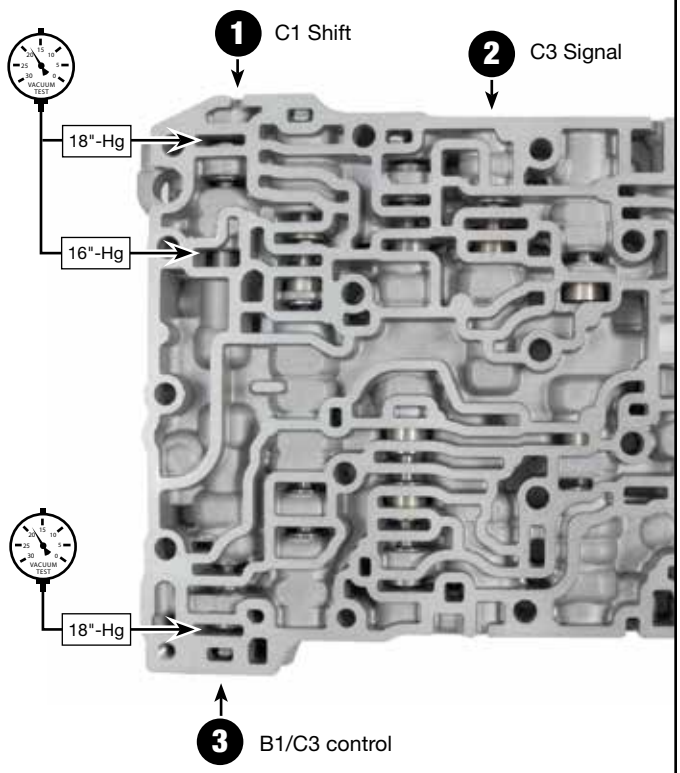

TF-81SC Middle Valve Body: Side 2

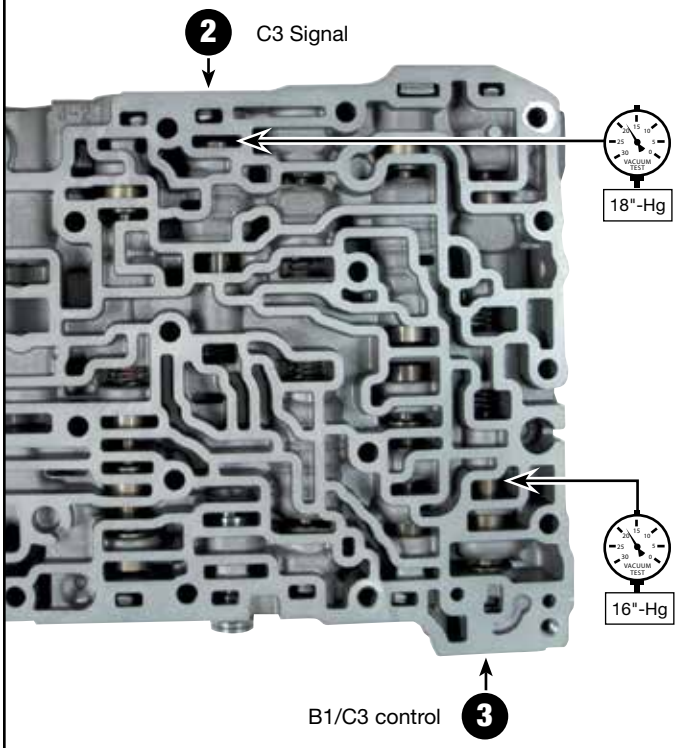

TF-81SC: Fits C3 signal bore, C1 shift bore & B1/C3 control bore.

©2016 Sonnax Industries, Inc.