sonnax®
TIME TESTED • INDUSTRY TRUSTED®

REMANUFACTURED VALVE BODIES

Instructions

6R80 Remanufactured Valve Body

Part No.
FZR80

WARNING: DO NOT touch the TCM pins or solenoid connectors.

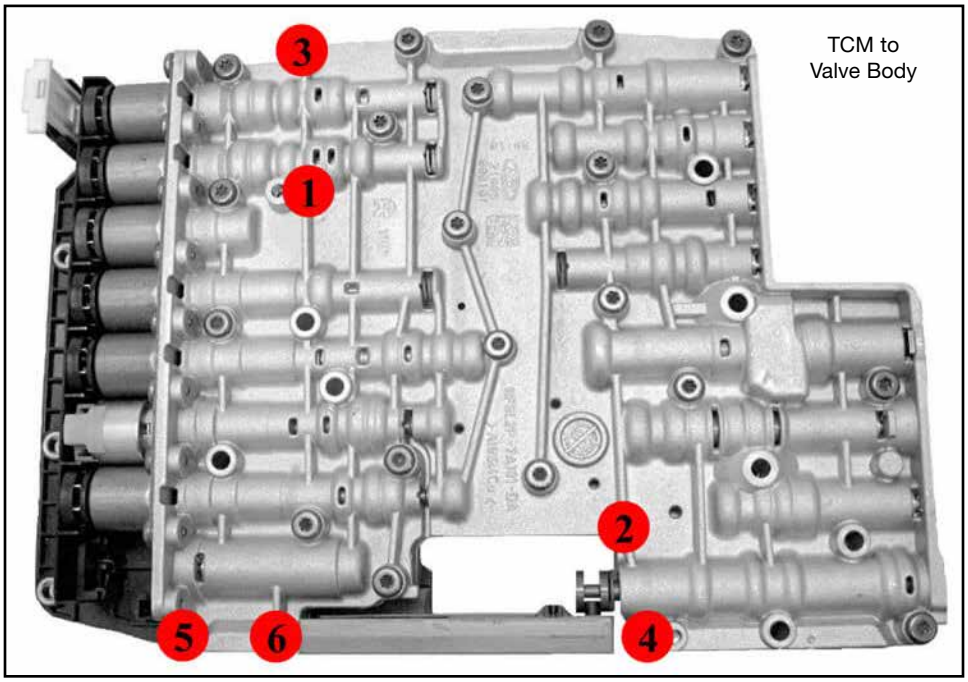

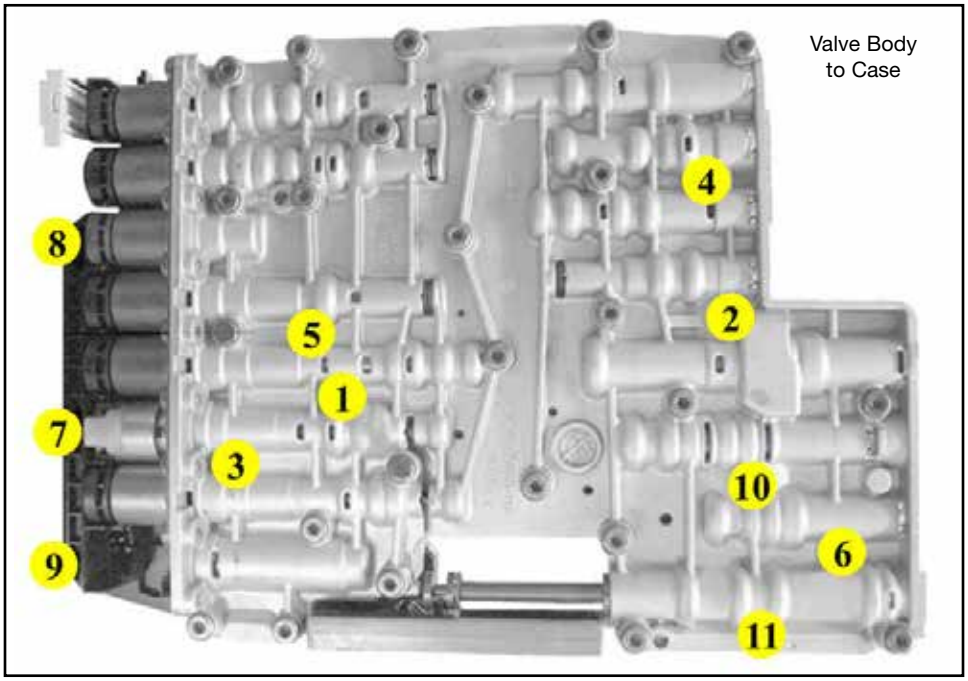

Torque valve body bolts in sequence shown: 53 in-lbs

©2016 Sonnax Industries, Inc.